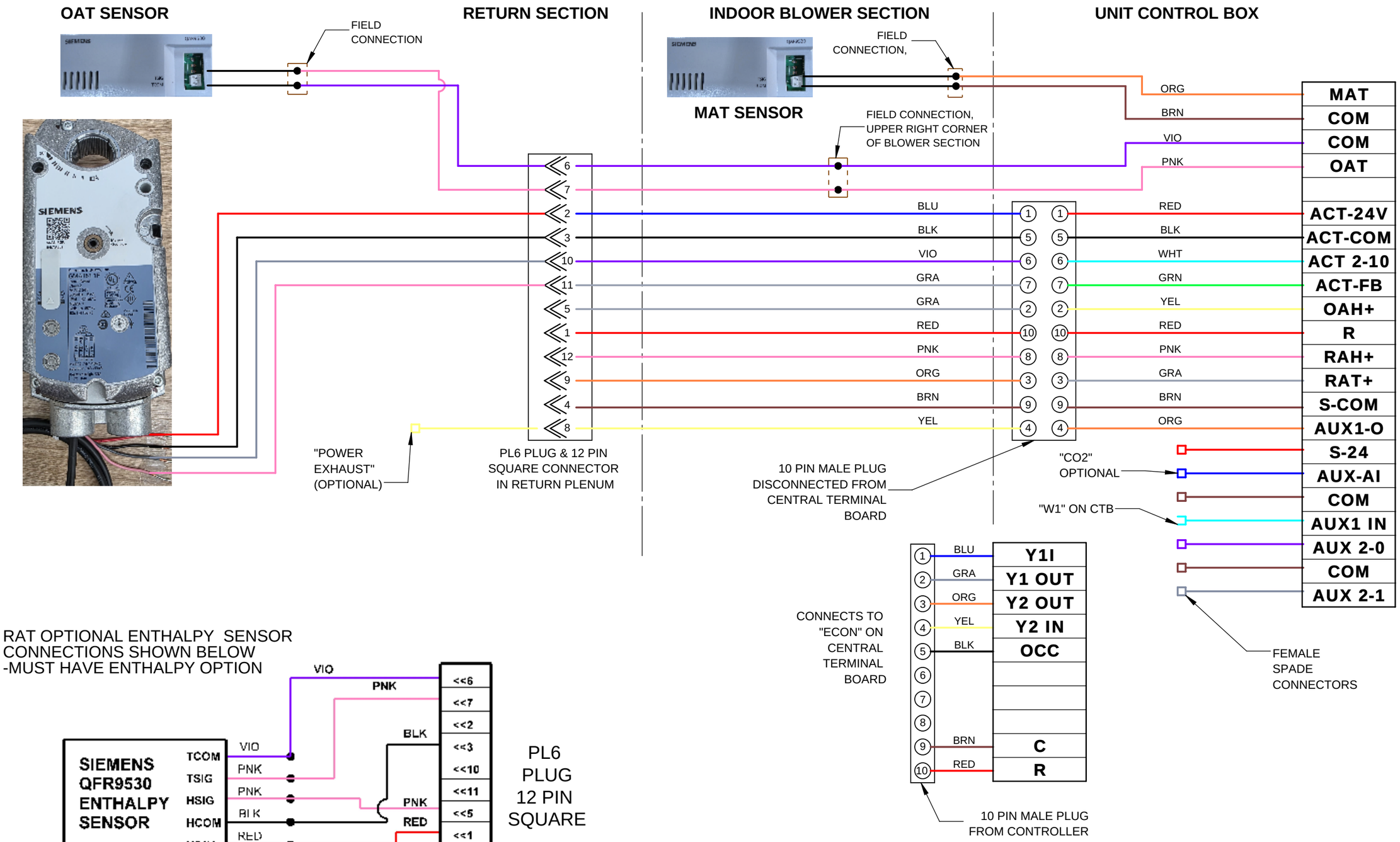

THIS DRAWING & THE INFORMATION CONTAINED THEREIN IS THE CONFIDENTIAL, PROPRIETARY INFORMATION OF CRYSTAL DISTRIBUTION INC., & MAY NOT BE USED OR REPRODUCED WITHOUT THE APPROVAL OF CRYSTAL DISTRIBUTION, INC. ALL RIGHTS RESERVED

APPROVALS		DATE
DRAWN:	mgreenwood	8/6/2026
CHECKED:		

DIMENSIONS ARE AS FOLLOWS: 1.00 in [25.40 mm]

TITLE/FILE NAME: WIRS-1009 SIEMENS LEGACY HARNESS FOR CTB CONNECTIONS

WIRS-1009

3RD ANGLE PROJECTION

CDI
Contact us @ www.cdicurbs.com or 1-888-234-7001

APPROXIMATE CURB WEIGHT (LBS.)

ECO #:

REV: 1

SCALE: 1:3

SHEET: 1 OF 1